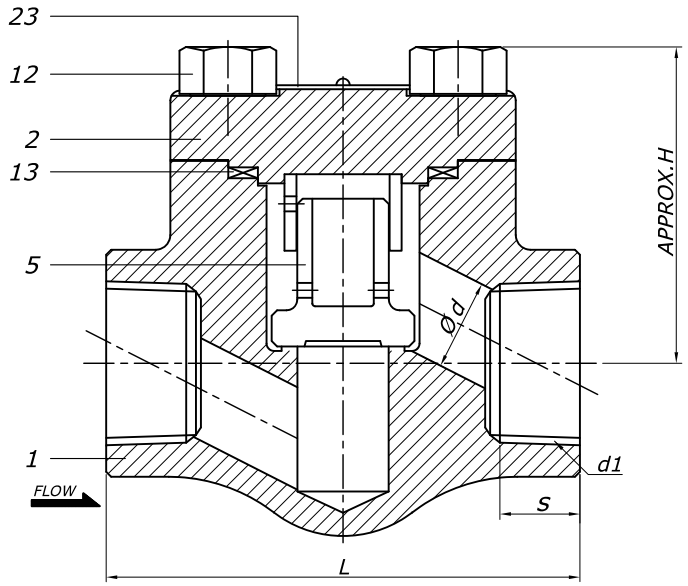

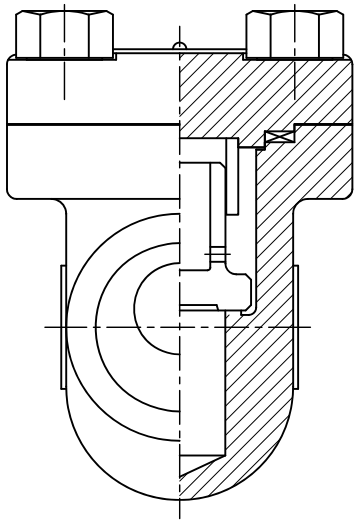

BILL OF MATERIALS

NO.	PART NAME	MATERIAL	Q'TY	REMARK
1	Body	A105	1	-
2	Cover	A105	1	-
5	Disc	A276-316	1	-
12	Cover Bolt	A193-B7	4	or EQ
13	Gasket	304SS+GRAPHITE	1	-
23	Name Plate	Aluminum	1	-
-	Seat(Integral)	STELLITE	1	-

NOTE

1. VALVE DESIGN: API 602
2. END CONNECTION: ASME B16.11
3. HYDROSTATIC TEST(API 598)
   Shell:383 Bar
   Seat:281 Bar

DIMENSIONS (UNIT: mm)

SIZE		L	H	Ød	S	d1		WEIGHT(kg)	Q'TY
1/2"	15A	96	65	10	13.6	1/2-14NPT		2.0	
3/4"	20A	96	65	12	13.9	3/4-14NPT		2.0	
1"	25A	121	76	17	17.3	1-11 1/2NPT		3.4	
1 1/4"	32A	141	84	24	18.0	1 1/4-11 1/2NPT		4.2	
1 1/2"	40A	161	101	29	18.4	1 1/2-11 1/2NPT		6.9	
2"	50A	172	116	37	19.2	2-11 1/2NPT		8.9	

PAINTING OR COATING
- ■ PHOSPHATIZED
- ☐ NONE
- ☐ OTHER

NO.	DATE	DESCRIPTION	DRA.	CHK.	APP.

TITLE	CLASS 1500 , A105/316 LIFT CHECK VALVE , B.C,NPT			
APP.	CHK.	DRA.	SCALE	NON
S.J.BANG	J.Y.JANG	W.G.LEE	DATE	2025.07.01
			DWG NO.	DEV-LC1500-A105-NPT3

동은밸브(주)
DONG EUN VALVE CO.,LTD.
(구)DKM DONG KANG METAL CO.,LTD.