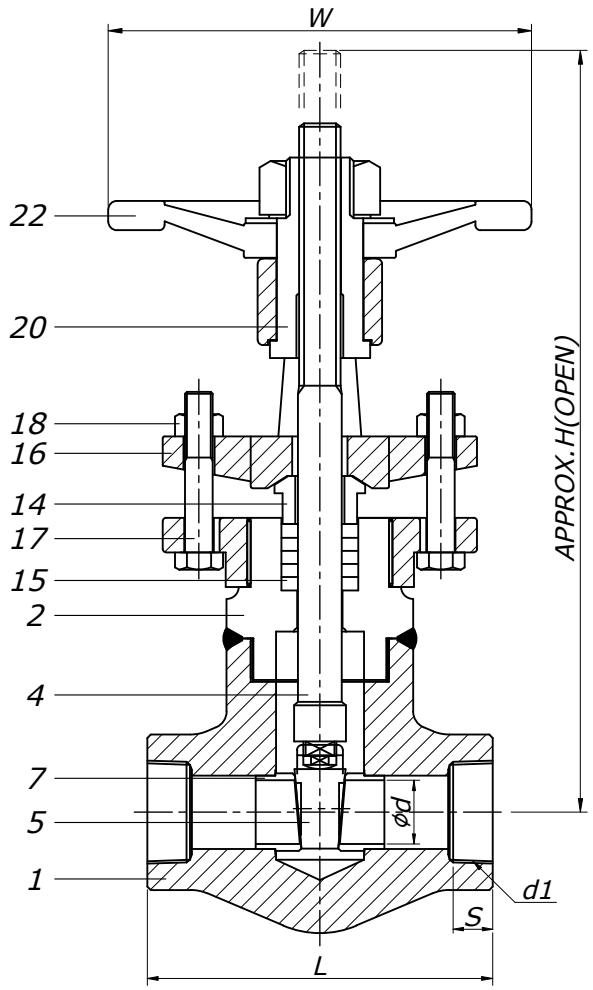

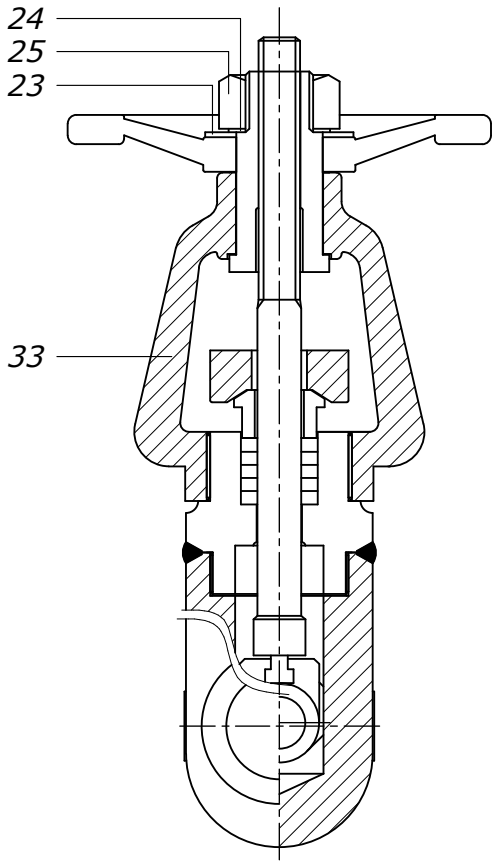

BILL OF MATERIALS

NO.	PART NAME	MATERIAL	Q'TY	REMARK
1	Body	A105	1	-
2	Bonnet	A105	1	-
4	Stem	A276/A479-410	1	-
5	Disc	A217-CA15	1	STELLITE
7	Seat Ring	A276/A479-410	2	STELLITE
14	Gland	A276-304	1	-
15	Gland Packing	GRAPHITE	1Set	-
16	Gland Flange	A105	1	-
17	Gland Bolt	A193-B7	2	or EQ
18	Gland Bolt Nut	A194-2H	2	or EQ
20	Sleeve	HIGH-TENSION BRASS	1	-
22	Hand Wheel	A197	1	-
23	Name Plate	ALUMINUM	1	-
25	Hand Wheel Nut	SS400+Zn PLATE	1	-
33	Yoke	A216-WCB	1	-

NOTE

1. VALVE DESIGN: ASME B16.34
2. END CONNECTION: ASME B16.11
3. HYDROSTATIC TEST(API 598)
   Shell:383 Bar
   Pneumatic Seat Test: 6 Bar

DIMENSIONS (UNIT: mm)

SIZE		L	H	W	ϕd	S	d1		WEIGHT(kg)	Q'TY
1/2"	15A	96	233	150	13	13.6	1/2-14NPT		4.7	
3/4"	20A	121	245	150	19	13.9	3/4-14NPT		6.8	
1"	25A	141	300	200	25	17.3	1-11 1/2NPT		8.5	
1 1/4"	32A	161	331	200	30	18.0	1 1/4-11 1/2NPT		13.0	
1 1/2"	40A	172	355	200	37	18.4	1 1/2-11 1/2NPT		15.5	
2"	50A	200	439	245	37	19.2	2-11 1/2NPT		18.0	

PAINTING OR COATING
- ■ PHOSPHATIZED
- ☐ NONE
- ☐ OTHER

NO.	DATE	DESCRIPTION	DRA.	CHK.	APP.

TITLE	CLASS 1500 , A105/13CR GATE VALVE , W.B, OS&Y,NPT			
APP.	CHK.	DRA.	SCALE	NON
S.J.BANG	W.G.LEE	S.E.PARK	DATE	2026.05.29
			DWG NO.	-

동 은 밸 브(주)
DONG EUN VALVE CO.,LTD.
(구) DKM DONG KANG METAL CO.,LTD.