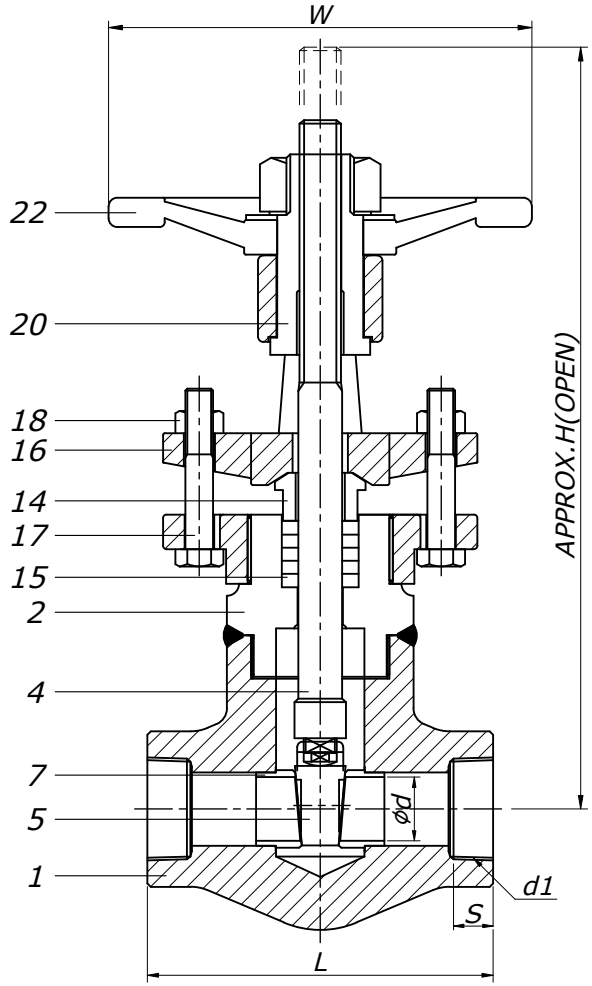


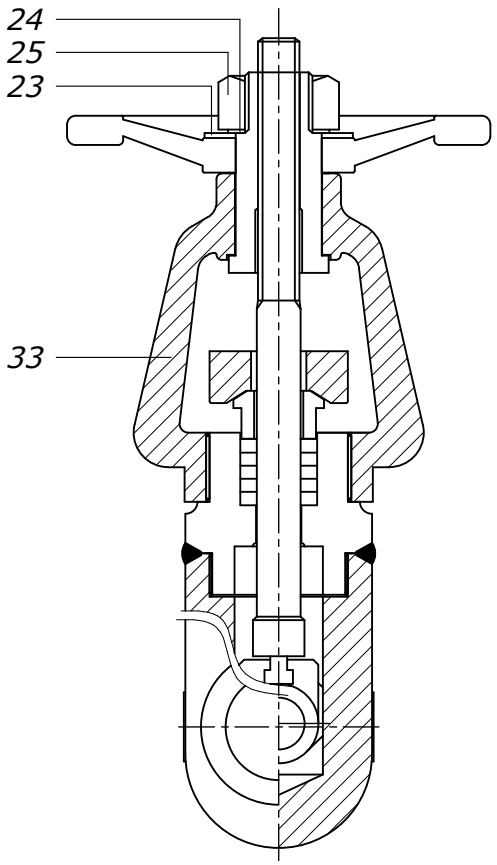


## BILL OF MATERIALS

| NO. | PART NAME | MATERIAL | Q'TY | REMARK |
|---|---|---|---|---|
| 1 | Body | A182-F316 | 1 | - |
| 2 | Bonnet | A182-F316 | 1 | - |
| 4 | Stem | A276-316 | 1 | - |
| 5 | Disc | A351-CF8M | 1 | STELLITE |
| 7 | Seat Ring | A276-316 | 2 | STELLITE |
| 14 | Gland | A276-304 | 1 | - |
| 15 | Gland Packing | GRAPHITE | 1Set | - |
| 16 | Gland Flange | A182-F304 | 1 | - |
| 17 | Gland Bolt | A193-B8 | 2 | or EQ |
| 18 | Gland Bolt Nut | A194-8 | 2 | or EQ |
| 20 | Sleeve | HIGH-TENSION BRASS | 1 | - |
| 22 | Hand Wheel | A197 | 1 | - |
| 23 | Name Plate | ALUMINUM | 1 | - |
| 25 | Hand Wheel Nut | SS400+Zn PLATE | 1 | - |
| 33 | Yoke | A351-CF8 | 1 | - |

## NOTE

1. VALVE DESIGN: ASME B16.34
2. END CONNECTION: ASME B16.11
3. HYDROSTATIC TEST(API 598)
   Shell:621 Bar
   Seat:456 Bar

DIMENSIONS (UNIT: mm)

| SIZE | | L | H | W | ϕd | S | d1 | | WEIGHT(kg) | Q'TY |
|---|---|---|---|---|---|---|---|---|---|---|
| 1/2" | 15A | 121 | 245 | 150 | 11.5 | 13.6 | 1/2-14NPT | | 6.8 | |
| 3/4" | 20A | 141 | 300 | 200 | 13 | 13.9 | 3/4-14NPT | | 8.5 | |
| 1" | 25A | 161 | 331 | 200 | 19 | 17.3 | 1-11 1/2NPT | | 13.0 | |
| 1 1/4" | 32A | 172 | 355 | 200 | 25 | 18.0 | 1 1/4-11 1/2NPT | | 15.5 | |
| 1 1/2" | 40A | 200 | 439 | 245 | 30 | 18.4 | 1 1/2-11 1/2NPT | | 18.0 | |
| 2" | 50A | 220 | 486 | 350 | 37 | 19.2 | 2-11 1/2NPT | | 20.0 | |

PAINTING OR COATING
- ☐ PHOSPHATIZED
- ■ NONE
- ☐ OTHER

| NO. | DATE | DESCRIPTION | DRA. | CHK. | APP. |
|---|---|---|---|---|---|
| | | | | | |
| | | | | | |

| | | | | |
|---|---|---|---|---|
| TITLE | CLASS 2500 , A182-F316/316 GATE VALVE , W.B, OS&Y,NPT | | | |
| APP. | CHK. | DRA. | SCALE | NON |
| S.J.BANG | W.G.LEE | S.E.PARK | DATE | 2026.05.29 |
| | | | DWG NO. | - |

동은밸브(주)
DONG EUN VALVE CO.,LTD.
(구) DKM DONG KANG METAL CO.,LTD.