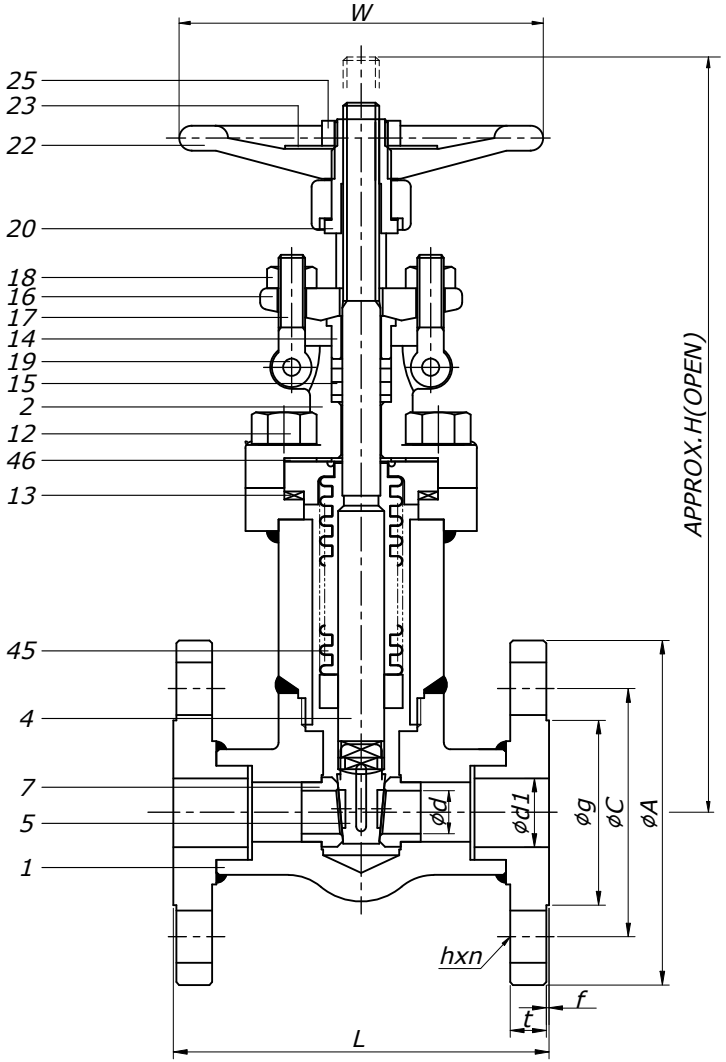

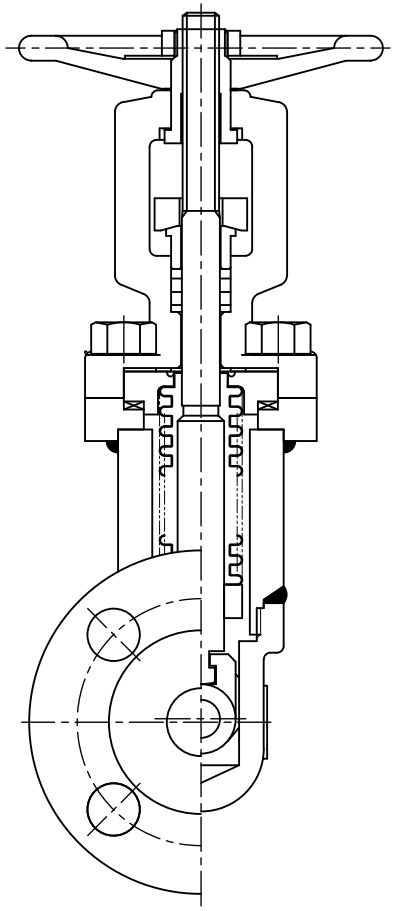

BILL OF MATERIALS

NO.	PART NAME	MATERIAL	Q'TY	REMARK
1	Body	A105	1	-
2	Bonnet	A105	1	-
4	Stem	A276/A479-410	1	-
5	Disc	A217-CA15	1	STELLITE
7	Seat Ring	A276/A479-410	2	STELLITE
12	Bonnet Bolt	A193-B7	4	or EQ
13	Gasket	304SS+GRAPHITE	1	-
14	Gland	A276-304	1	-
15	Gland Packing	GRAPHITE	1Set	-
16	Gland Flange	A105	1	-
17	Gland Bolt	A193-B7	2	or EQ
18	Gland Bolt Nut	A194-2H	2	or EQ
19	Gland Bolt Pin	A276-304	2	-
20	Sleeve	A276/A479-410	1	-
22	Hand Wheel	A197	1	-
23	Name Plate	ALUMINUM	1	-
25	Hand Wheel Nut	SS400+Zn PLATE	1	-
45	Bellows	316L SS	1	-
46	Metal Gasket	A240-304	1	-

NOTE

1. VALVE DESIGN: ASME B16.34
2. FACE TO FACE: MAKER STD' (GATE 300#)
3. END CONNECTION: ASME B16.5
4. HYDROSTATIC TEST(API 598)
   Shell:30 Bar
   Pneumatic Seat Test: 6 Bar

DIMENSIONS (UNIT: mm)

SIZE		L ±1.5	H	W	ϕd	ϕA	ϕC	hxn	ϕg	f	t	ϕd1		WEIGHT(kg)	Q'TY
1/2"	15A	140	231	105	13	89	60.3	16x4	34.9	1.6	11.2	15.7		8.8	
3/4"	20A	152	231	105	13	98	69.9	16x4	42.9	1.6	12.7	20.8		9.8	
1"	25A	165	256	105	19	108	79.4	16x4	50.8	1.6	14.2	26.7		13.0	
1 1/4"	32A	178	342	150	25	117	88.9	16x4	63.5	1.6	15.7	35.1		15.5	
1 1/2"	40A	190	342	150	30	127	98.4	16x4	73.0	1.6	17.5	40.9		16.0	
2"	50A	216	505	150	37	152	120.6	19x4	92.1	1.6	19.1	52.6		25.5	

PAINTING OR COATING
- ■ PHOSPHATIZED
- ☐ NONE
- ☐ OTHER

NO.	DATE	DESCRIPTION	DRA.	CHK.	APP.

TITLE	CLASS 150 , A105/13CR GATE VALVE , BELLOWS ,B.B, OS&Y , RF			
APP.	CHK.	DRA.	SCALE	NON
S.J.BANG	W.G.LEE	S.E.PARK	DATE	2026.05.29
			DWG NO.	-

동은밸브(주)
DONG EUN VALVE CO.,LTD.
(구) DKM DONG KANG METAL CO.,LTD.