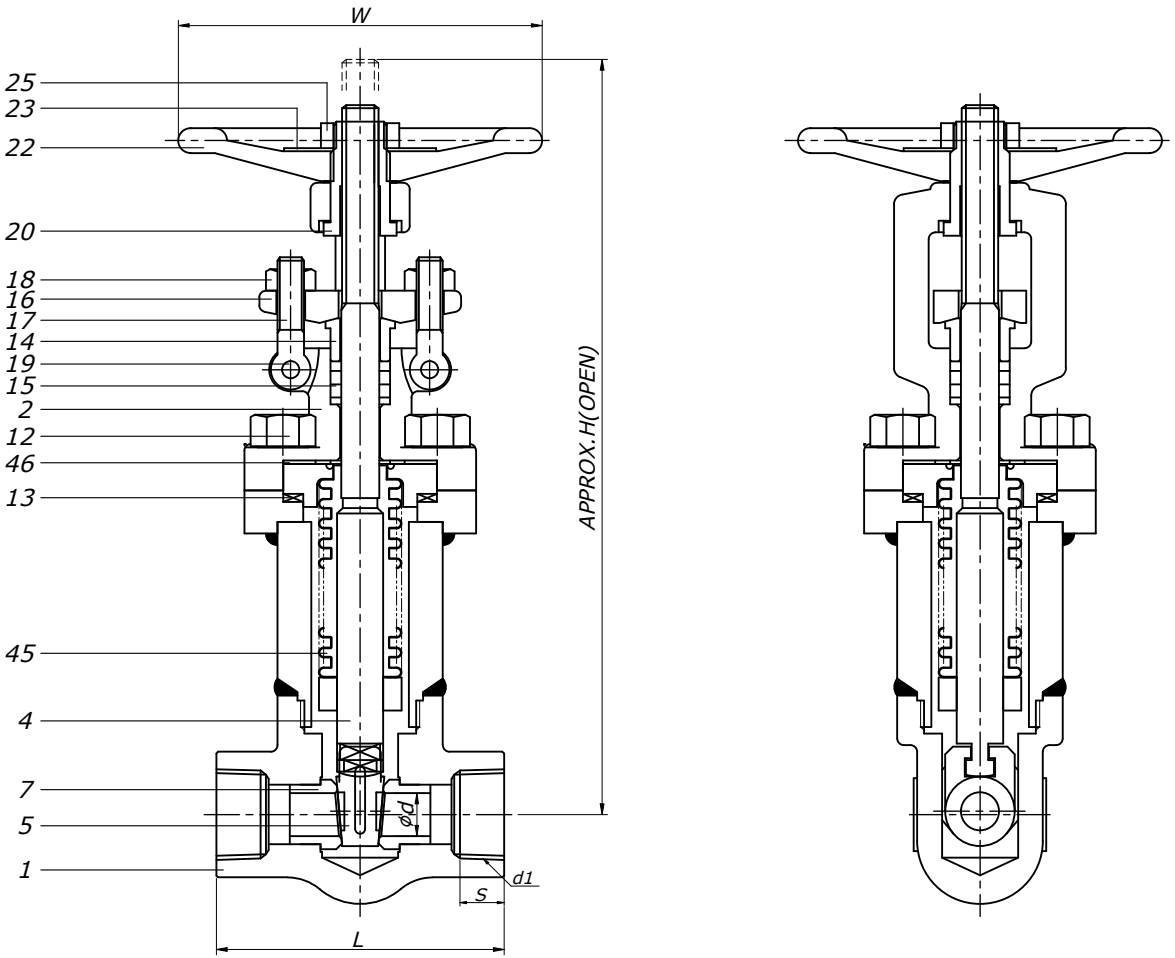

BILL OF MATERIALS

NO.	PART NAME	MATERIAL	Q'TY	REMARK
1	Body	A182-F304	1	-
2	Bonnet	A182-F304	1	-
4	Stem	A276-304	1	-
5	Disc	A351-CF8	1	STELLITE
7	Seat Ring	A276-304	2	STELLITE
12	Bonnet Bolt	A193-B8	4	or EQ
13	Gasket	304SS+GRAPHITE	1	-
14	Gland	A276-304	1	-
15	Gland Packing	GRAPHITE	1Set	-
16	Gland Flange	A182-F304	1	-
17	Gland Bolt	A193-B8	2	or EQ
18	Gland Bolt Nut	A194-8	2	or EQ
19	Gland Bolt Pin	A276-304	2	-
20	Sleeve	A276/A479-410	1	-
22	Hand Wheel	A197	1	-
23	Name Plate	ALUMINUM	1	-
25	Hand Wheel Nut	SS400+Zn PLATE	1	-
45	Bellows	316L SS	1	-
46	Metal Gasket	A240-304	1	-

NOTE

1. VALVE DESIGN: ASME B16.34
2. END CONNECTION: ASME B16.11
3. HYDROSTATIC TEST(API 598)
   Shell:149 Bar
   Pneumatic Seat Test: 6 Bar

DIMENSIONS (UNIT: mm)

SIZE		L	H	W	ϕd	S	d1		WEIGHT(kg)	Q'TY
1/2"	15A	87	231	105	13	13.6	1/2-14NPT		6.8	
3/4"	20A	87	231	105	13	13.9	3/4-14NPT		6.8	
1"	25A	96	256	105	19	17.3	1-11 1/2NPT		8.5	
1 1/4"	32A	141	342	150	25	18.0	1 1/4-11 1/2NPT		13.0	
1 1/2"	40A	141	342	150	30	18.4	1 1/2-11 1/2NPT		15.5	
2"	50A	161	505	150	37	19.2	2-11 1/2NPT		19.0	

PAINTING OR COATING
- ☐ PHOSPHATIZED
- ■ NONE
- ☐ OTHER

NO.	DATE	DESCRIPTION	DRA.	CHK.	APP.

TITLE	CLASS 600 , A182-F304/304 GATE VALVE , BELLOWS ,B.B, OS&Y , NPT			
APP.	CHK.	DRA.	SCALE	NON
S.J.BANG	W.G.LEE	S.E.PARK	DATE	2026.05.29
			DWG NO.	-

동 은 밸 브(주)
DONG EUN VALVE CO.,LTD.
(구) DKM DONG KANG METAL CO.,LTD.