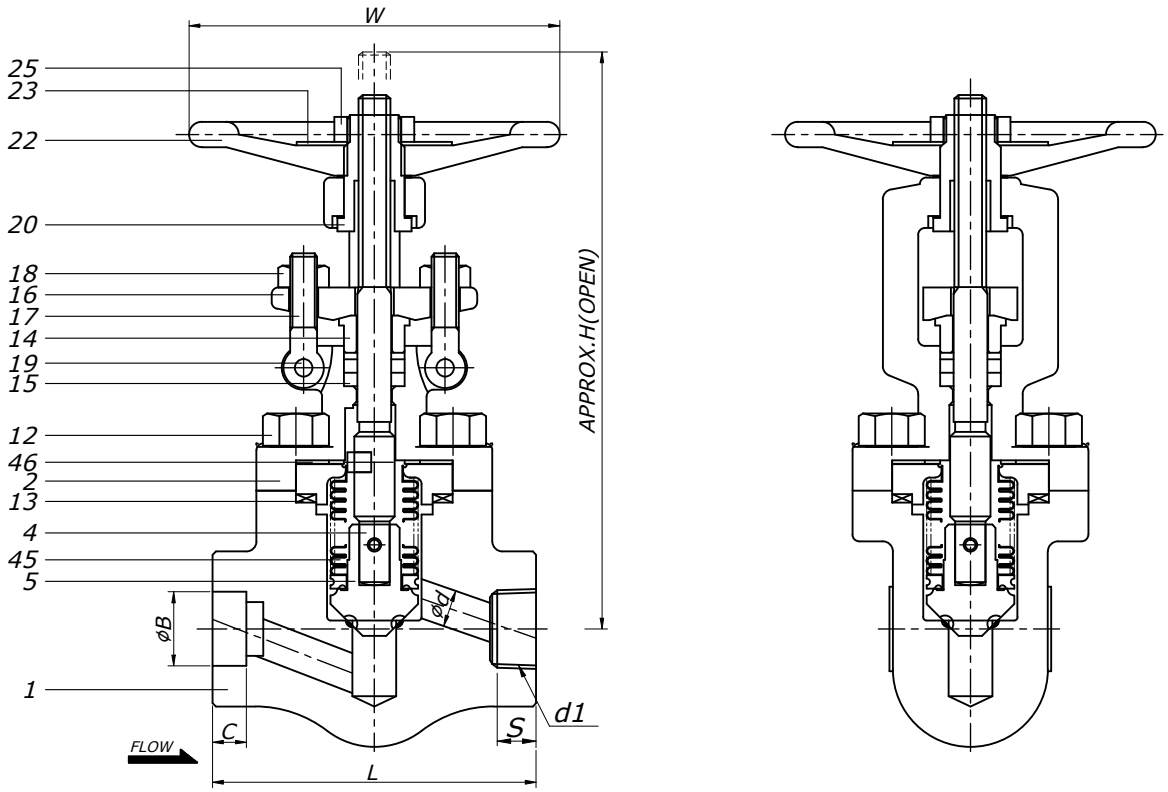

BILL OF MATERIALS

NO.	PART NAME	MATERIAL	Q'TY	REMARK
1	Body	A105	1	-
2	Bonnet	A105	1	-
4	Stem	A276/A479-410	1	-
5	Disc	A276/A479-410	1	STELLITE
12	Bonnet Bolt	A193-B7	4	or EQ
13	Gasket	304SS+GRAPHITE	1	-
14	Gland	A276-304	1	-
15	Gland Packing	GRAPHITE	1Set	-
16	Gland Flange	A105	1	-
17	Gland Bolt	A193-B7	2	or EQ
18	Gland Bolt Nut	A194-2H	2	or EQ
19	Gland Bolt Pin	A276-304	2	-
20	Sleeve	A276/A479-410	1	-
22	Hand Wheel	A197	1	-
23	Name Plate	ALUMINUM	1	-
25	Hand Wheel Nut	SS400+Zn PLATE	1	-
45	Bellows	316L SS	1	-
46	Metal Gasket	A240-304	1	-
-	Seat(Integral)	STELLITE	1	-

NOTE

1. VALVE DESIGN: ASME B16.34
2. END CONNECTION: ASME B16.11
3. HYDROSTATIC TEST(API 598)
   Shell:154 Bar
   Seat:113 Bar

DIMENSIONS (UNIT: mm)

SIZE		L	H	W	ϕd	S	d1	ϕB	C		WEIGHT(kg)	Q'TY
1/2"	15A	96	169	105	9.5	13.6	1/2-14NPT	22.00	10		2.7	
3/4"	20A	96	169	105	12.5	13.9	3/4-14NPT	27.40	13		2.7	
1"	25A	141	202	125	18.5	17.3	1-11 1/2NPT	34.10	13		5.8	
1 1/4"	32A	141	202	125	23	18.0	1 1/4-11 1/2NPT	42.90	13		5.8	
1 1/2"	40A	141	202	125	27	18.4	1 1/2-11 1/2NPT	49.00	13		5.8	
2"	50A	161	233	150	35	19.2	2-11 1/2NPT	61.45	16		9.3	

PAINTING OR COATING
- ■ PHOSPHATIZED
- ☐ NONE
- ☐ OTHER

NO.	DATE	DESCRIPTION	DRA.	CHK.	APP.

TITLE	CLASS 600 , A105/13CR GLOBE VALVE , BELLOWS ,B.B, OS&Y , SWxNPT			
APP.	CHK.	DRA.	SCALE	NON
S.J.BANG	W.G.LEE	S.E.PARK	DATE	2026.05.29
			DWG NO.	-

동은밸브(주)
DONG EUN VALVE CO.,LTD.
(구) DKM DONG KANG METAL CO.,LTD.