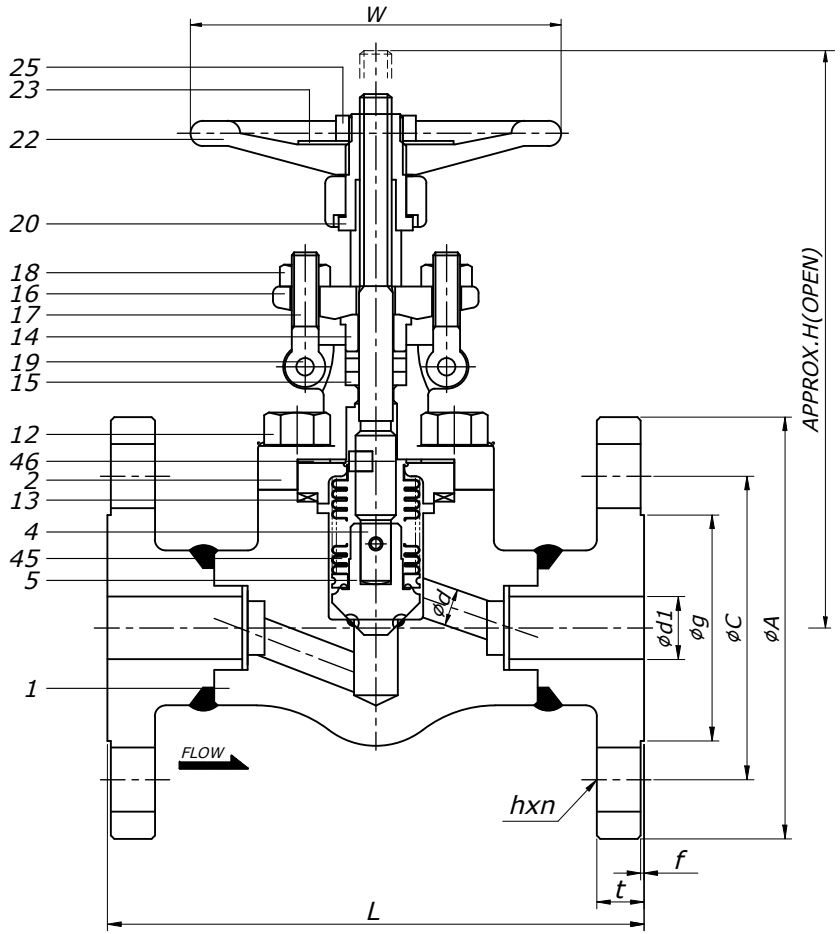

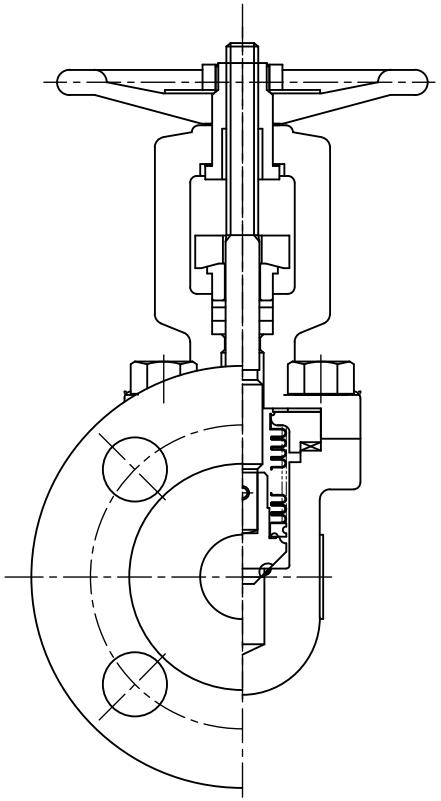

BILL OF MATERIALS

NO.	PART NAME	MATERIAL	Q'TY	REMARK
1	Body	A182-F304	1	-
2	Bonnet	A182-F304	1	-
4	Stem	A276-304	1	-
5	Disc	A276-304	1	STELLITE
12	Bonnet Bolt	A193-B8	4	or EQ
13	Gasket	304SS+GRAPHITE	1	-
14	Gland	A276-304	1	-
15	Gland Packing	GRAPHITE	1Set	-
16	Gland Flange	A182-F304	1	-
17	Gland Bolt	A193-B8	2	or EQ
18	Gland Bolt Nut	A194-8	2	or EQ
19	Gland Bolt Pin	A276-304	2	-
20	Sleeve	A276/A479-410	1	-
22	Hand Wheel	A197	1	-
23	Name Plate	ALUMINUM	1	-
25	Hand Wheel Nut	SS400+Zn PLATE	1	-
45	Bellows	316L SS	1	-
46	Metal Gasket	A240-304	1	-
-	Seat(Integral)	STELLITE	1	-

NOTE

1. VALVE DESIGN: ASME B16.34
2. END CONNECTION: ASME B16.10,ASME B16.5
3. HYDROSTATIC TEST(API 598)
   Shell:75 Bar
   Seat:55 Bar

DIMENSIONS (UNIT: mm)

SIZE		L ±1.5	H	W	ϕA	ϕC	hxn	ϕg	f	t	ϕd	ϕd1		WEIGHT(kg)	Q'TY
1/2"	15A	152	169	105	95	66.7	16x4	34.9	1.6	14.2	9.5	15.7		5.2	
3/4"	20A	178	169	105	117	82.5	19x4	42.9	1.6	15.7	12.5	20.8		6.2	
1"	25A	203	202	125	124	88.9	19x4	50.8	1.6	17.5	18.5	26.7		8.8	
1 1/4"	32A	216	202	125	133	98.4	19x4	63.5	1.6	19.1	23	35.1		9.5	
1 1/2"	40A	229	202	125	156	114.3	22x4	73.0	1.6	20.6	27	40.9		10.0	
2"	50A	267	233	150	165	127.0	19x8	92.1	1.6	22.4	35	52.6		15.5	

PAINTING OR COATING
- ☐ PHOSPHATIZED
- ■ NONE
- ☐ OTHER

NO.	DATE	DESCRIPTION	DRA.	CHK.	APP.

TITLE	CLASS 300 , A182-F304/304 GLOBE VALVE , BELLOWS ,B.B, OS&Y , RF			
APP.	CHK.	DRA.	SCALE	NON
S.J.BANG	W.G.LEE	S.E.PARK	DATE	2026.05.29
			DWG NO.	-

동 은 밸 브(주)
DONG EUN VALVE CO.,LTD.
(구) DKM DONG KANG METAL CO.,LTD.