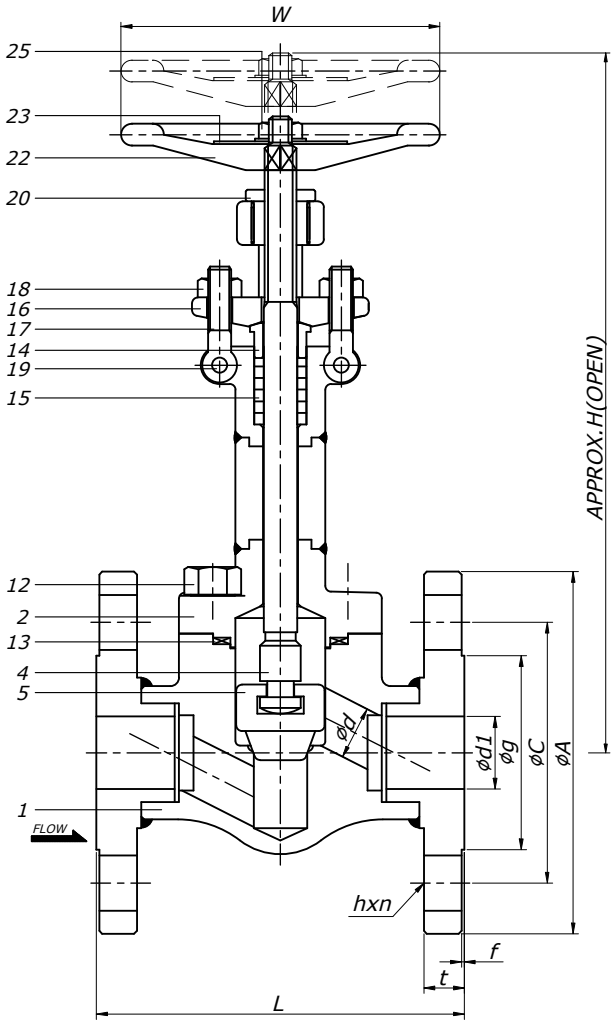

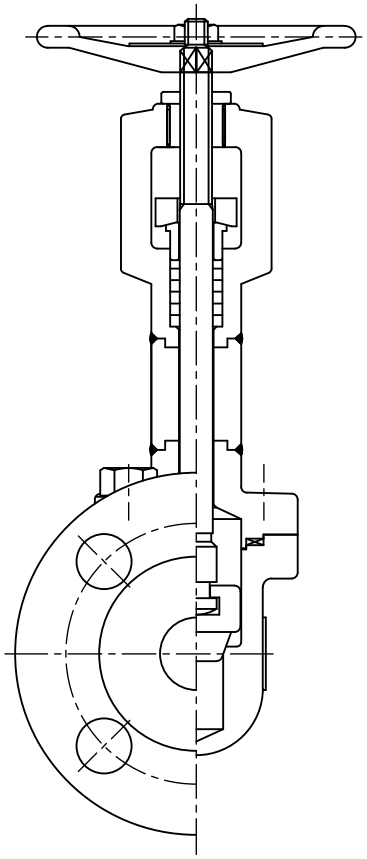

BILL OF MATERIALS

NO.	PART NAME	MATERIAL	Q'TY	REMARK
1	Body	A182-F316	1	-
2	Bonnet	A182-F316	1	-
4	Stem	A276-316	1	-
5	Disc	A351-CF8M	1	-
12	Bonnet Bolt	A193-B8	4	or EQ
13	Gasket	316SS+GRAPHITE	1	-
14	Gland	A276-304	1	-
15	Gland Packing	GRAPHITE	1Set	-
16	Gland Flange	A182-F304	1	-
17	Gland Bolt	A193-B8	2	or EQ
18	Gland Bolt Nut	A194-8	2	or EQ
19	Gland Bolt Pin	A276-304	2	-
20	Sleeve	A276/A479-410	1	-
22	Hand Wheel	A197	1	-
23	Name Plate	ALUMINUM	1	-
25	Hand Wheel Nut	SS400	1	-
-	Seat(Integral)	STELLITE	1	-

NOTE

1. VALVE DESIGN: API 602
2. END CONNECTION: ASME B16.10,ASME B16.5
3. HYDROSTATIC TEST(API 598)
   Shell:29 Bar
   Seat:21 Bar

DIMENSIONS (UNIT: mm)

SIZE		L ±1.5	H	W	øA	øC	hxn	øg	f	t	ød	ød1		WEIGHT(kg)	Q'TY
1/2"	15A	108	220	90	89	60.3	16x4	34.9	1.6	11.2	10	15.7		2.4	
3/4"	20A	117	296	90	98	69.9	16x4	42.9	1.6	12.7	13	20.8		3.3	
1"	25A	127	332	105	108	79.4	16x4	50.8	1.6	14.2	19	26.7		4.1	
1 1/4"	32A	140	360	125	117	88.9	16x4	63.5	1.6	15.7	25	35.1		7.1	
1 1/2"	40A	165	401	125	127	98.4	16x4	73.0	1.6	17.5	30	40.9		8.8	
2"	50A	203	420	150	152	120.6	19x4	92.1	1.6	19.1	37	52.6		14.0	

PAINTING OR COATING
- ☐ PHOSPHATIZED
- ■ NONE
- ☐ OTHER

NO.	DATE	DESCRIPTION	DRA.	CHK.	APP.

TITLE	CLASS 150 , A182-F316/316 LONG GLOBE VALVE , B.B, OS&Y,RF			
APP.	CHK.	DRA.	SCALE	NON
S.J.BANG	W.G.LEE	S.E.PARK	DATE	2026.05.29
			DWG NO.	-

동은밸브(주)
DONG EUN VALVE CO.,LTD.
(구) DKM DONG KANG METAL CO.,LTD.