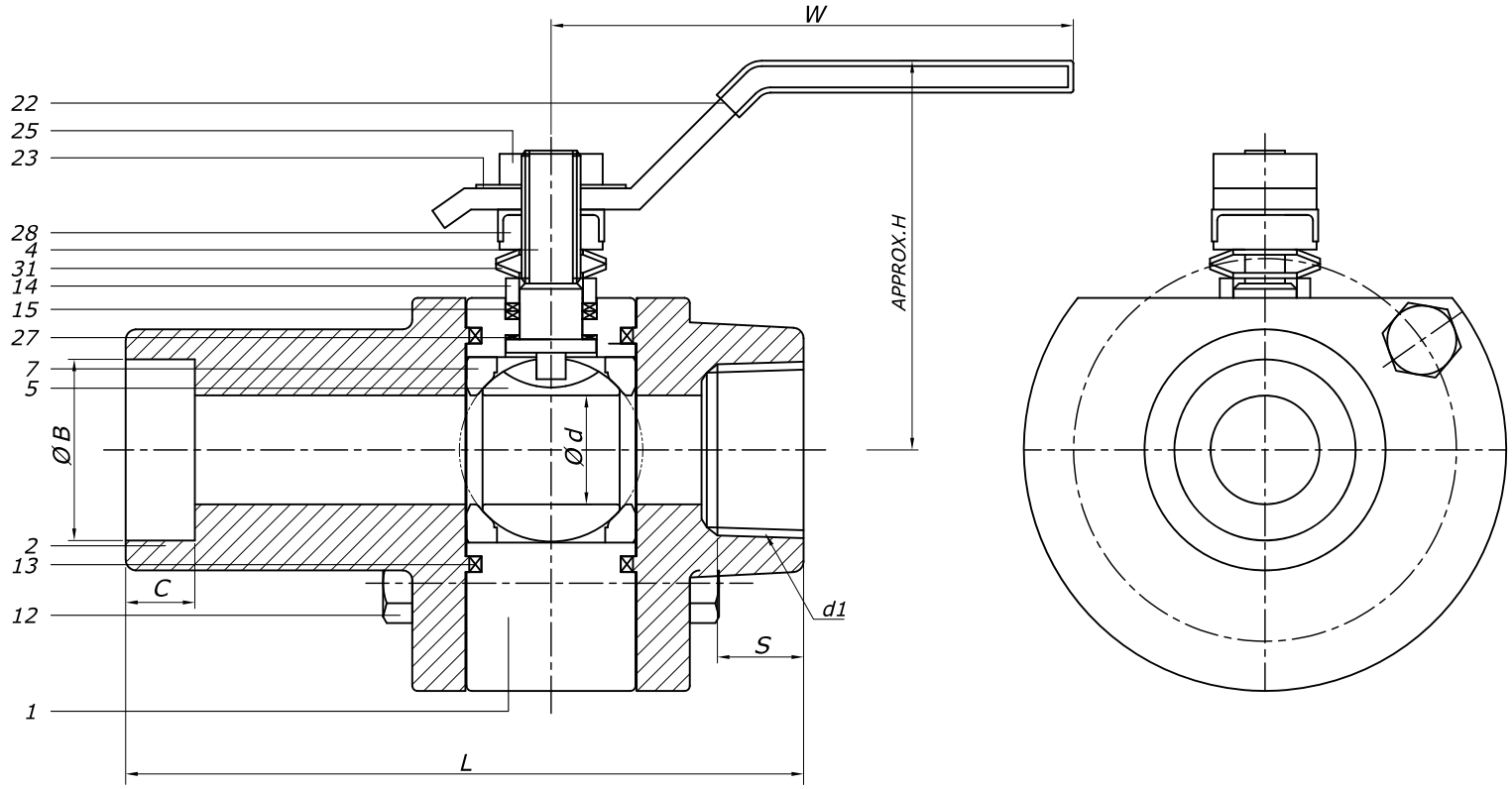

BILL OF MATERIALS

NO.	PART NAME	MATERIAL	Q'TY	REMARK
1	Body	A105	1	-
2	Body Cap	A105	2	-
4	Stem	A276-304	1	-
5	Ball	A276-304	1	-
7	Seat	NYLON	2	-
12	Cap Bolt	A193-B7	1Set	or EQ
13	Gasket	304SS+GRAPHITE	2	-
14	Gland	A276-316	1	-
15	Gland Packing	RTFE	1Set	-
22	Handle	A108-1020	1	-
23	Nameplate	ALUMINIUM	1	-
25	Handle Nut	SS400+Zn PLATE	1	-
27	Thrust Bearing	RTFE	1	-
28	Stem Nut	SS400+Zn PLATE	1	-
31	Conical Spring	A240-304	2	-

NOTE

1. VALVE DESIGN: ASME B16.34
2. END CONNECTION: ASME B16.11
3. HYDROSTATIC TEST(API 598)
   Shell:383 Bar
   Pneumatic Seat Test: 6 Bar

DIMENSIONS (UNIT: mm)

SIZE		L	H	W	Ød	S	d1	ØB	C		WEIGHT(kg)	Q'TY
1/2"	15A	112.5	62	150	14.2	13.6	1/2-14NPT	22.00	10		1.5	
3/4"	20A	127.5	74	180	20.5	13.9	3/4-14NPT	27.40	13		2.5	
1"	25A	148	88	180	25.0	17.3	1-11 1/2NPT	34.10	13		4.0	
1 1/4"	32A	148	88	255	31.6	18.0	1 1/4-11 1/2NPT	42.90	13		4.0	
1 1/2"	40A	159	93	255	38.0	18.4	1 1/2-11 1/2NPT	49.00	13		6.0	
2"	50A	190	125	255	50.8	19.2	2-11 1/2NPT	61.45	16		12.0	

PAINTING OR COATING
- ■ PHOSPHATIZED
- ☐ NONE
- ☐ OTHER

NO.	DATE	DESCRIPTION	DRA.	CHK.	APP.

TITLE	CLASS 1500 , A105/304 , SWxNPT 3-PIECE BALL VALVE(FLOATING TYPE)			
APP.	CHK.	DRA.	SCALE	NON
S.J.BANG	J.Y.JANG	W.G.LEE	DATE	2025.07.01
			DWG NO.	DEV-BA1500-A105-SWNPT

동은밸브(주)
DONG EUN VALVE CO.,LTD.
(구)DKM DONG KANG METAL CO.,LTD.