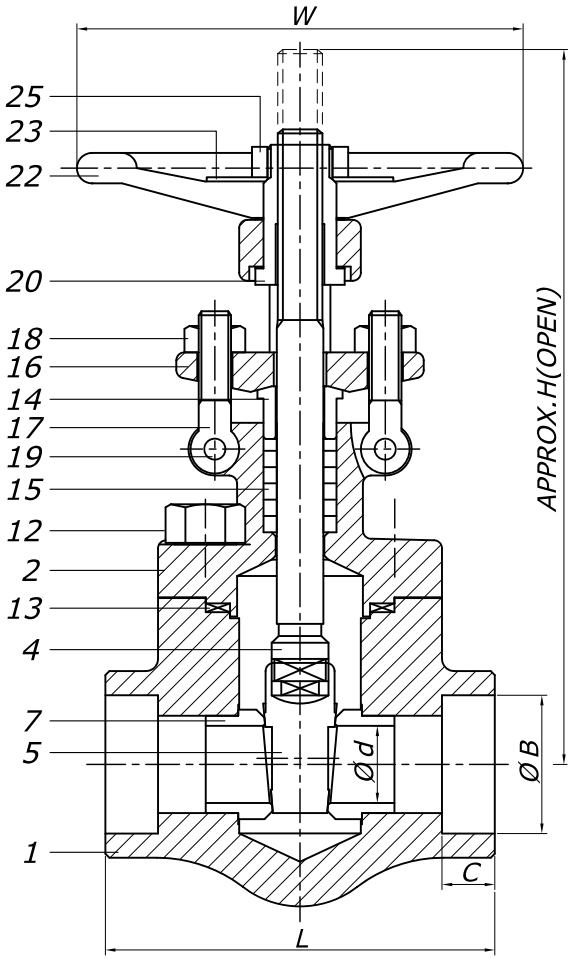

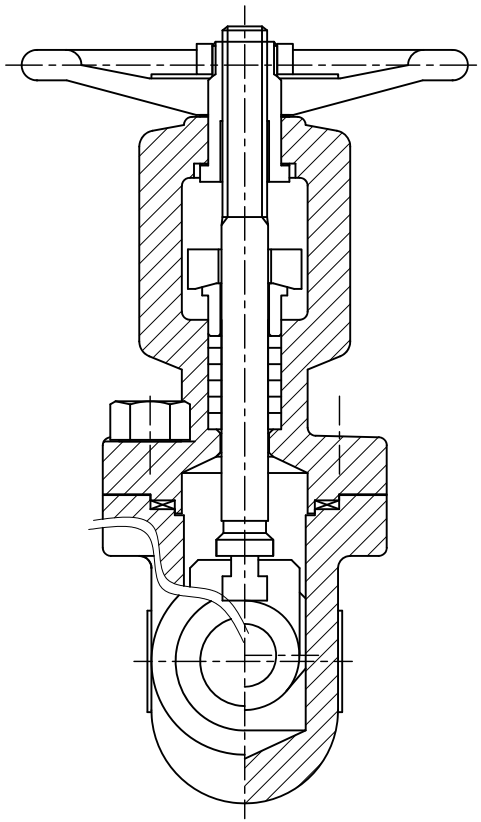

BILL OF MATERIALS

NO.	PART NAME	MATERIAL	Q'TY	REMARK
1	Body	A105	1	-
2	Bonnet	A105	1	-
4	Stem	A276/A479-410	1	-
5	Disc	A217-CA15	1	STELLITE
7	Seat Ring	A276/A479-410	2	STELLITE
12	Bonnet Bolt	A193-B7	4	or EQ
13	Gasket	304SS+GRAPHITE	1	-
14	Gland	A276-304	1	-
15	Gland Packing	GRAPHITE	1Set	-
16	Gland Flange	A105	1	-
17	Gland Bolt	A193-B7	2	or EQ
18	Gland Bolt Nut	A194-2H	2	or EQ
19	Gland Bolt Pin	A276-304	2	-
20	Sleeve	A276/A479-410	1	-
22	Hand Wheel	A197	1	-
23	Name Plate	ALUMINUM	1	-
25	Hand Wheel Nut	SS400+Zn PLATE	1	-

NOTE

1. VALVE DESIGN: API 602
2. END CONNECTION: ASME B16.11
3. HYDROSTATIC TEST(API 598)
   Shell:383 Bar
   Pneumatic Seat Test: 6 Bar

DIMENSIONS (UNIT: mm)

SIZE		L	H	W	Ød	ØB	C		WEIGHT(kg)	Q'TY
1/2"	15A	96	178	105	13	22.00	10		2.5	
3/4"	20A	96	178	105	13	27.40	13		2.5	
1"	25A	121	210	125	19	34.10	13		4.7	
1 1/4"	32A	141	222	125	25	42.90	13		6.0	
1 1/2"	40A	161	257	150	30	49.00	13		9.5	
2"	50A	172	292	150	37	61.45	16		11.8	

PAINTING OR COATING
- ■ PHOSPHATIZED
- ☐ NONE
- ☐ OTHER

NO.	DATE	DESCRIPTION	DRA.	CHK.	APP.

TITLE	CLASS 1500 , A105/13CR GATE VALVE , B.B, OS&Y,SW			
APP.	CHK.	DRA.	SCALE	NON
S.J.BANG	J.Y.JANG	W.G.LEE	DATE	2025.07.01
			DWG NO.	DEV-GA1500-A105-SW

동은밸브(주)
DONG EUN VALVE CO.,LTD.
(구)DKM DONG KANG METAL CO.,LTD.