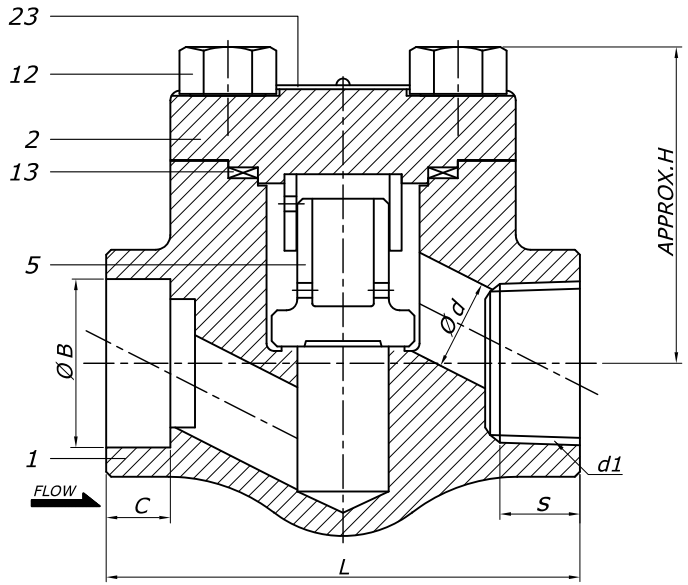


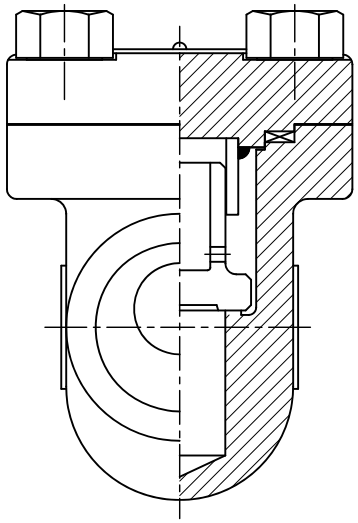

## BILL OF MATERIALS

| NO. | PART NAME | MATERIAL | Q'TY | REMARK |
|---|---|---|---|---|
| 1 | Body | A105 | 1 | - |
| 2 | Cover | A105 | 1 | - |
| 5 | Disc | A276/A479-410 | 1 | - |
| 12 | Cover Bolt | A193-B7 | 4 | or EQ |
| 13 | Gasket | 304SS+GRAPHITE | 1 | - |
| 23 | Name Plate | Aluminum | 1 | - |
| - | Seat(Integral) | STELLITE | 1 | - |

## NOTE

1. VALVE DESIGN: API 602
2. END CONNECTION: ASME B16.11
3. HYDROSTATIC TEST(API 598)
   Shell:205 Bar
   Seat:150 Bar

DIMENSIONS (UNIT: mm)

| SIZE | | L | H | Ød | S | d1 | ØB | C | | WEIGHT(kg) | Q'TY |
|---|---|---|---|---|---|---|---|---|---|---|---|
| 1/2" | 15A | 87 | 55 | 12 | 13.6 | 1/2-14NPT | 22.00 | 10 | | 1.3 | |
| 3/4" | 20A | 87 | 55 | 12 | 13.9 | 3/4-14NPT | 27.40 | 13 | | 1.3 | |
| 1" | 25A | 96 | 65 | 17 | 17.3 | 1-11 1/2NPT | 34.10 | 13 | | 2.0 | |
| 1 1/4" | 32A | 121 | 76 | 24 | 18.0 | 1 1/4-11 1/2NPT | 42.90 | 13 | | 3.4 | |
| 1 1/2" | 40A | 141 | 84 | 29 | 18.4 | 1 1/2-11 1/2NPT | 49.00 | 13 | | 4.2 | |
| 2" | 50A | 161 | 101 | 36 | 19.2 | 2-11 1/2NPT | 61.45 | 16 | | 6.9 | |

PAINTING OR COATING
- ■ PHOSPHATIZED
- ☐ NONE
- ☐ OTHER

| NO. | DATE | DESCRIPTION | DRA. | CHK. | APP. |
|---|---|---|---|---|---|
| | | | | | |
| | | | | | |

| | | | | |
|---|---|---|---|---|
| TITLE | CLASS 800 , A105/13CR<br>LIFT CHECK VALVE , B.C,SWxNPT | | | |
| APP. | CHK. | DRA. | SCALE | NON |
| S.J.BANG | J.Y.JANG | W.G.LEE | DATE | 2025.07.01 |
| | | | DWG NO. | DEH-LC800-A105-SWNPT |

동은밸브(주)
DONG EUN VALVE CO.,LTD.
(구)DKM DONG KANG METAL CO.,LTD.