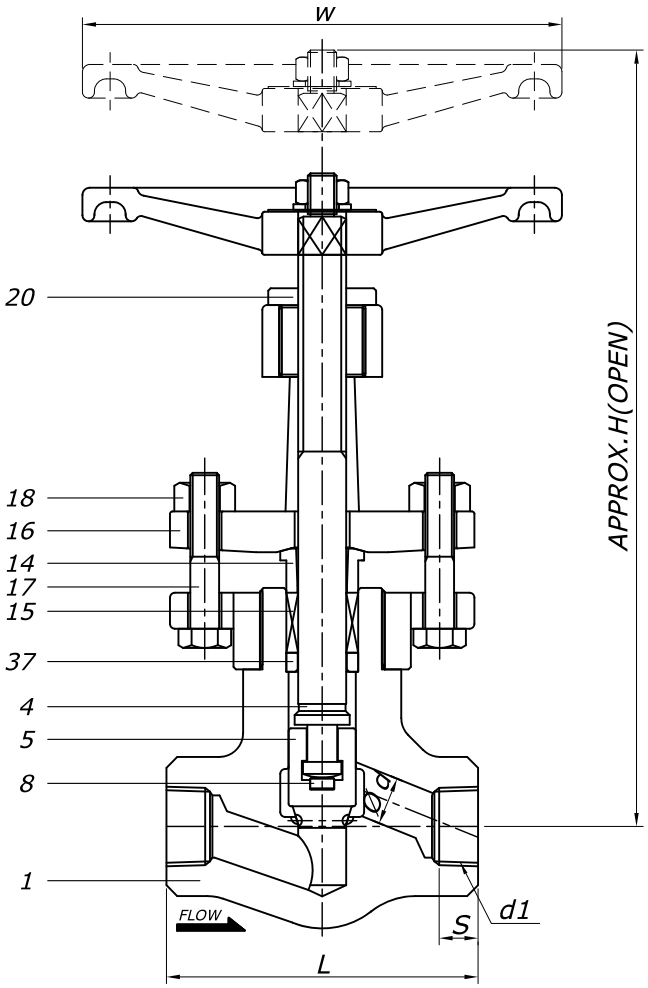

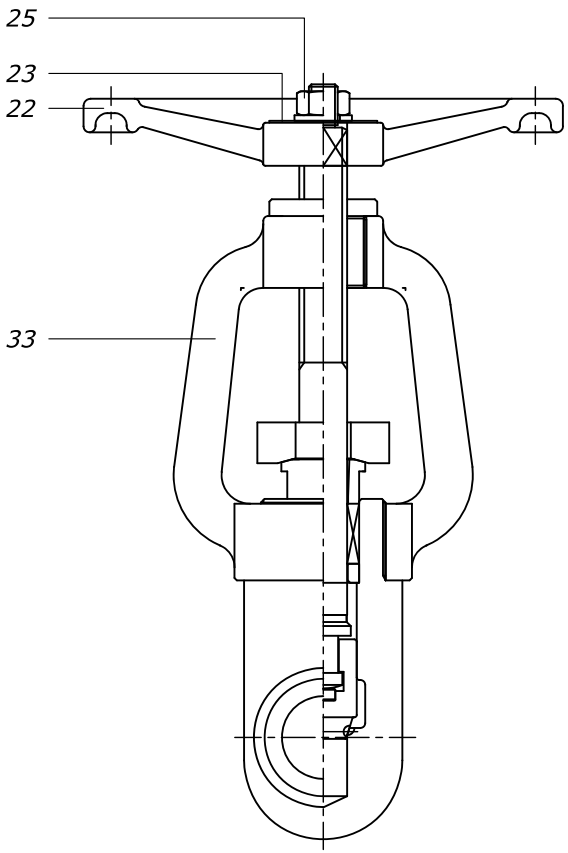

BILL OF MATERIALS

NO.	PART NAME	MATERIAL	Q'TY	REMARK
1	Body	A182-F304	1	-
4	Stem	A276-304	1	-
5	Disc	A276-304	1	STELLITE
8	Disc Thrust Plate	A564-630	1	-
14	Gland	A276-304	1	-
15	Gland Packing	GRAPHITE	1Set	-
16	Gland Flange	A276-304	1	-
17	Gland Bolt	A193-B8	2	or EQ
18	Gland Bolt Nut	A194-8	2	or EQ
20	Sleeve	HIGH-TENSION BRASS	1	-
22	Hand Wheel	A197	1	-
23	Name Plate	ALUMINUM	1	-
25	Hand Wheel Nut	SS400	1	-
33	Yoke	A351-CF8	1	-
37	Loose Backseat	A276/A479-431	1	NITRIDED
-	Seat(Integral)	STELLITE	1	-

NOTE

1. VALVE DESIGN: ASME B16.34
2. END CONNECTION: ASME B16.11
3. HYDROSTATIC TEST(API 598)
   Shell:373 Bar
   Seat:273 Bar

DIMENSIONS (UNIT: mm)

SIZE		L	H	W	Ød	S	d1		WEIGHT(kg)	Q'TY
1/2"	15A	120	225	200	12	13.6	1/2-14NPT		5.2	
3/4"	20A	120	225	200	15	13.9	3/4-14NPT		5.2	
1"	25A	130	290	260	20	17.3	1-11 1/2NPT		8.5	
1 1/4"	32A	200	380	360	25	18.0	1 1/4-11 1/2NPT		20.0	
1 1/2"	40A	200	380	360	30	18.4	1 1/2-11 1/2NPT		20.0	
2"	50A	240	425	360	36	19.2	2-11 1/2NPT		32.0	

PAINTING OR COATING
- ☐ PHOSPHATIZED
- ■ NONE
- ☐ OTHER

NO.	DATE	DESCRIPTION	DRA.	CHK.	APP.

TITLE	CLASS 1500 , A182-F304 NON-BONNET TYPE GLOBE, OS&Y, NPT			
APP.	CHK.	DRA.	SCALE	NON
S.J.BANG	J.Y.JANG	W.G.LEE	DATE	2025.07.01
			DWG NO.	DEY-NB1500-F304-NPT

동은밸브(주)
DONG EUN VALVE CO.,LTD.
(구)DKM DONG KANG METAL CO.,LTD.